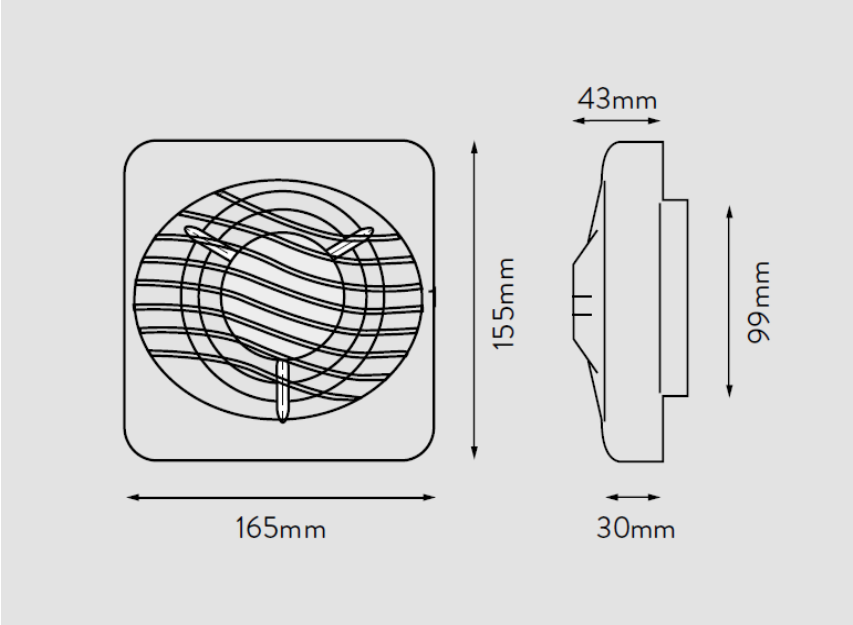
43mm
155mm
99mm
165mm
30mm

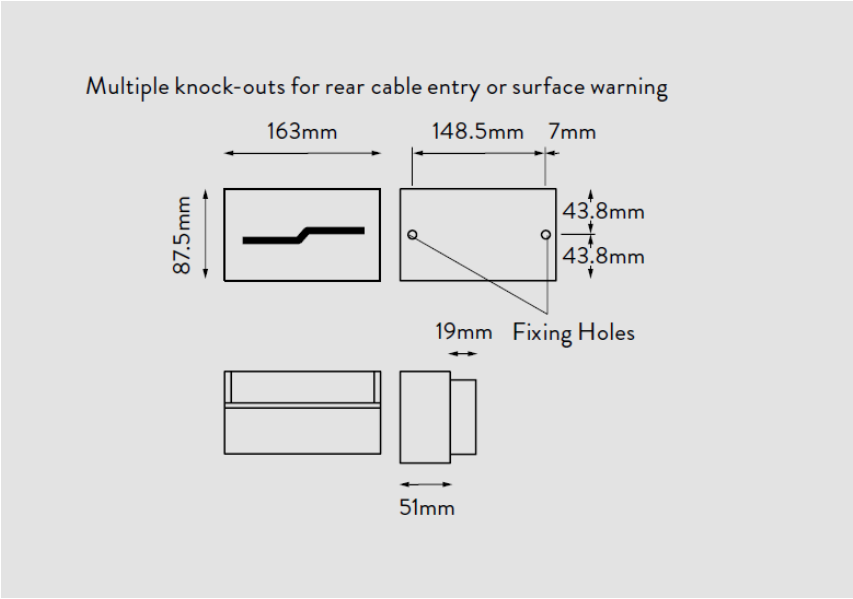
Multiple knock-outs for rear cable entry or surface warning
163mm
148.5mm
7mm
87.5mm
43.8mm
43.8mm
19mm
Fixing Holes
51mm