PART NO.	DESCRIPTION	ASSY. NO.
2/62304/0	FROM CHOKE TO ON/OFF SWITCH 150mm BLUE (1.0mm) S/S — S/S	1.
2/61895/0	FROM ON/OFF SWITCH TO PCB P1 140mm BLUE (1.0mm) S/S — BF	2.
202/62063/0	FROM CHOKE TO PCB P4 TO HALOGEN PSU. 250mm BROWN (1.0mm) BF — S/S + BOOT	3.
202/62064/0	FROM HALOGEN PSU N TO PCB MIST 200mm BLUE (1.0mm) BF — S/S + BOOT	4.
202/62063/0	FROM HALOGEN PSU L TO PCB LIVE 250mm BROWN (1.0mm) BF — S/S + BOOT	5.
2/61827/0	FROM 12v PSU TO "4 POLE T-BLOCK" 350mm RED (1.5mm) STRIP 6mm — STRIP 6mm Ø4 RING TERMINAL	6.
2/61828/0	FROM 12v PSU TO "4 POLE T-BLOCK" 350mm BLACK (1.5mm) STRIP 6mm — STRIP 6mm Ø4 RING TERMINAL	7.
2/61880/0	FROM KSD 125 DEG CUT OUT TO TERMINAL CONNECTOR 2. 200mm BROWN (1.0mm²) S/F + BOOT — S/S + BOOT	8
2/61881/0	FROM KSD 90DEG CUT OUT TO BLOWER TO ELEMENT. 220mm BROWN (1.0mm²) S/F + BOOT — D/S 100mm BROWN (1.0mm²) S/S	9
2/61882/0	FROM ELEMENT TO TERMINAL CONNECTOR 1. 100mm PURPLE (1.0mm²) S/S — S/S + BOOT	10
2/61883/0	FROM ELEMENT TO BLOWER TO TERMINAL CONNECTOR 3. 100mm WHITE (1.0mm²) S/S — D/S 100mm WHITE (1.0mm²) S/S + BOOT	11
2/61915/0	FROM KSD 125 DEG CUT OUT TO KSD 90 DEG CUT OUT. 100mm BROWN (1.0mm²) S/F + BOOT — S/F + BOOT	12
2/62437/0	EARTH WIRE 180mm GRN/YLW (1.0mm)² S/S	13

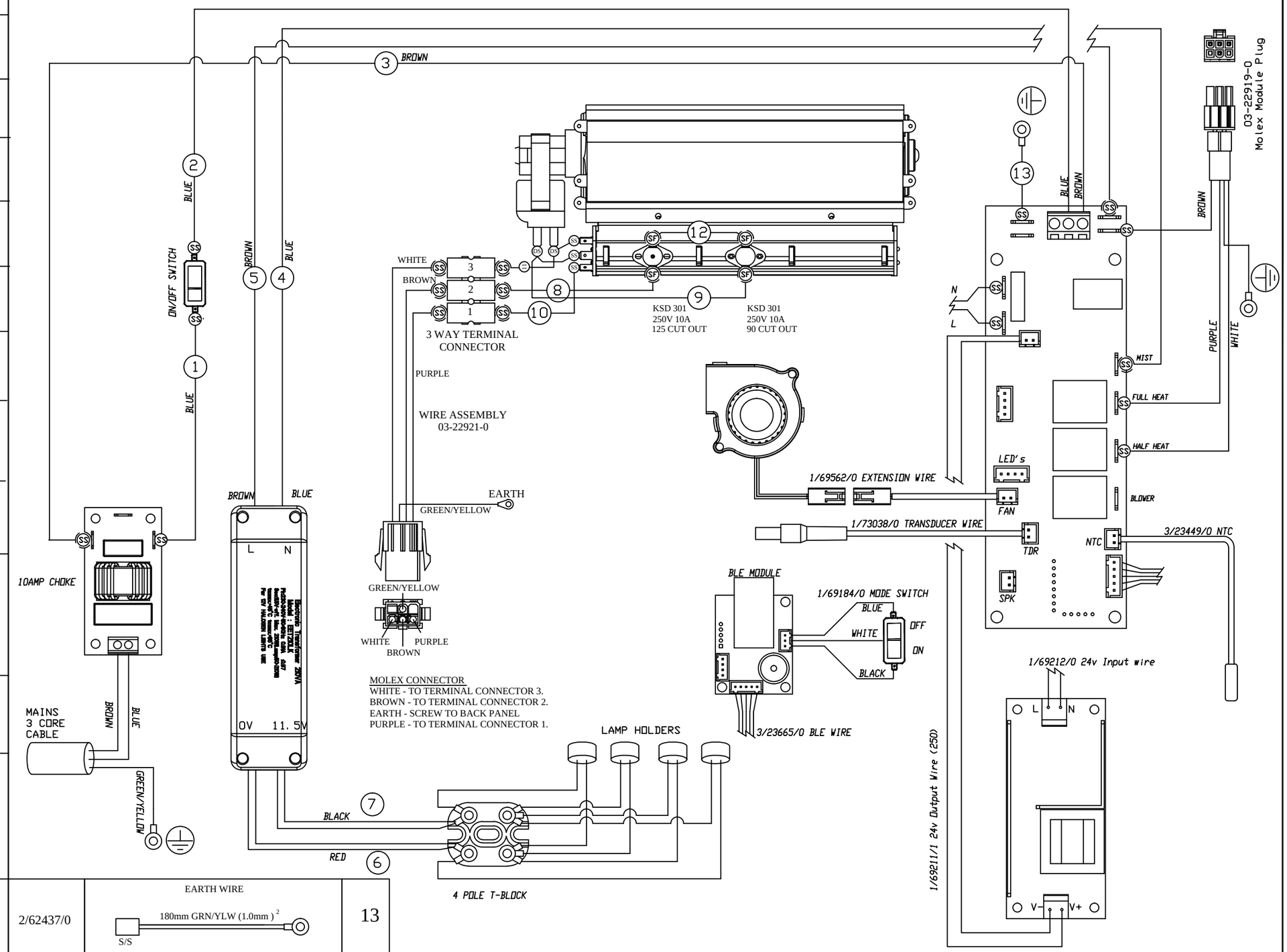

ISSUE	MODIFICATIONS	ECN	APPD	DATE
1	RELEASE FOR PRODUCTION	----	KL	19-01-18
2	DIAGRAM UPDATE AFTER PILOT RUN WIRE ASSY 4 202-62064-0 WAS 02-15932-0	10881	HC	21-02-18

NOTES

DO NOT SCALE
IF IN DOUBT ASK

THIRD ANGLE PROJECTION

GLEN DIMPLEX RESEARCH & DEVELOPMENT
Dunleer, Co.Louth, Ireland. Tel: 041 9800204. Fax: 041 6851464.

DRAWN BY	DATE	SCALE	HOLE TOL	GEN TOL
HC	08-09-17		+/-0.05	0 +/-0,4 0,0 +/-0,2 0,00+/-0,1
APP'D BY	DATE	DIM IN mm	ANGLES +/-0.5°	

R.o.H.S.
All material must comply with the requirements of European Directive 2002/95/EC on the restriction of the use of certain hazardous substances.

THIS DRAWING IS SUPPLIED IN CONFIDENCE AND THE COPYRIGHT THEREOF IS THE PROPERTY OF GLEN DIMPLEX : IT MUST NOT BE USED BY A THIRD PARTY WITHOUT PRIOR PERMISSION. © 2007

PROJECT: PRO CHASSIS ECO

TITLE: WIRING DIAGRAM

DRG NO: 0/11914/0

A3

Sht 1 of 1