PART NO.	DESCRIPTION	ASSY. NO.
X-02/62495/0	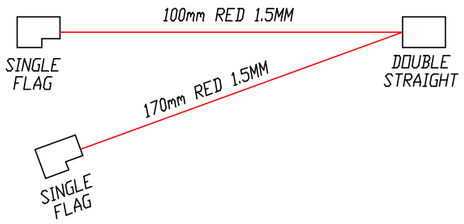	1

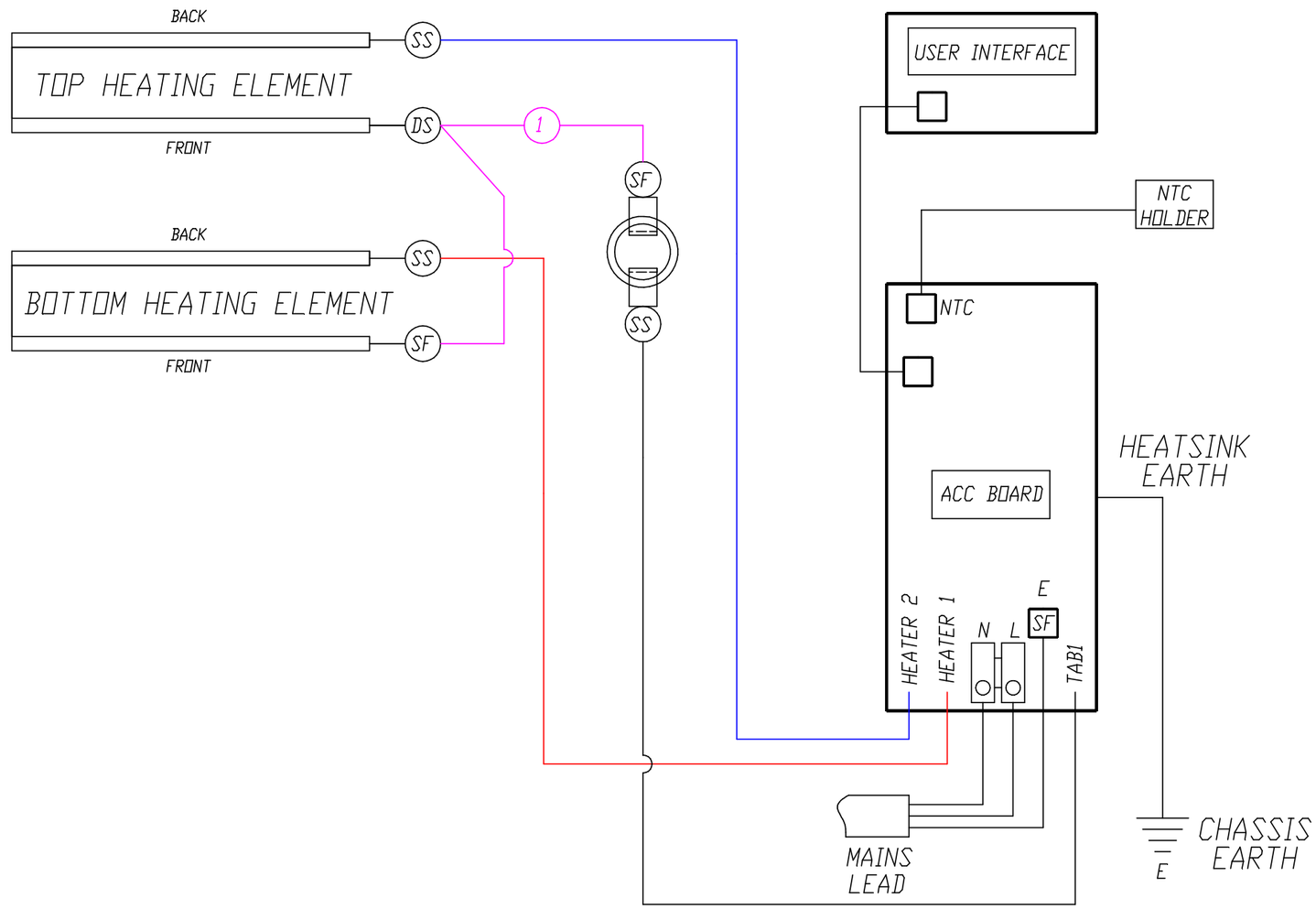

ISSUE	MODIFICATIONS	APPD	DATE
1	ISSUED FOR PRODUCTION	JB	13/09/16
2	SLEEVING DETAIL REMOVED	NT	18/04/18
3	WIRE LENGTHS UPDATED & TERMINALS ADDED	NT	01/10/18
4	WIRE LENGHTS UPDATED	NT	17/06/19
5	WIRE LENGHTS UPDATED	NT	19/07/19
6	WIRE LENGHTS UPDATED	NT	09/08/19
7	SOLDERED WIRES ADDED	JB	25/10/19
8	WIRE LENGTHS, COLOUR AND TERMINALS UPDATED	JB	20/04/21

NOTES
ALL WIRE ASSY'S ARE TO BE 1.5mm 2 SILICONE RUBBER INSULATED WIRE.

DO NOT SCALE
IF IN DOUBT ASK

THIRD ANGLE PROJECTION

GLEN DIMPLEX RESEARCH & DEVELOPMENT
Dunleer, Co.Louth, Ireland. Tel: 041 51309. Fax: 041 51464.

DRAWN BY	DATE	SCALE	HOLE TOL	GEN TOL
JB	13/07/16	-	+/-0.05	0 +/-0,4 0,0 +/-0,2 0,00+/-0,1
APP'D BY	DATE	DIM IN	ANGLES	
		mm	+/-0.5°	

MATERIAL

FINISH

THIS DRAWING IS SUPPLIED IN CONFIDENCE AND THE COPYRIGHT THEREOF IS THE PROPERTY OF GLEN DIMPLEX : IT MUST NOT BE USED BY A THIRD PARTY WITHOUT PRIOR PERMISSION. ©2017

PROJECT PLX 2017

TITLE 30 WIRING DIAGRAM

DRG NO 0/11902/0

A3

Sht 1 of 1