PART NO.	DESCRIPTION	ASSY. NO.
02/62627/0	SINGLE FLAG — 150mm RED 1.0MM^2 — SINGLE STRAIGHT	1

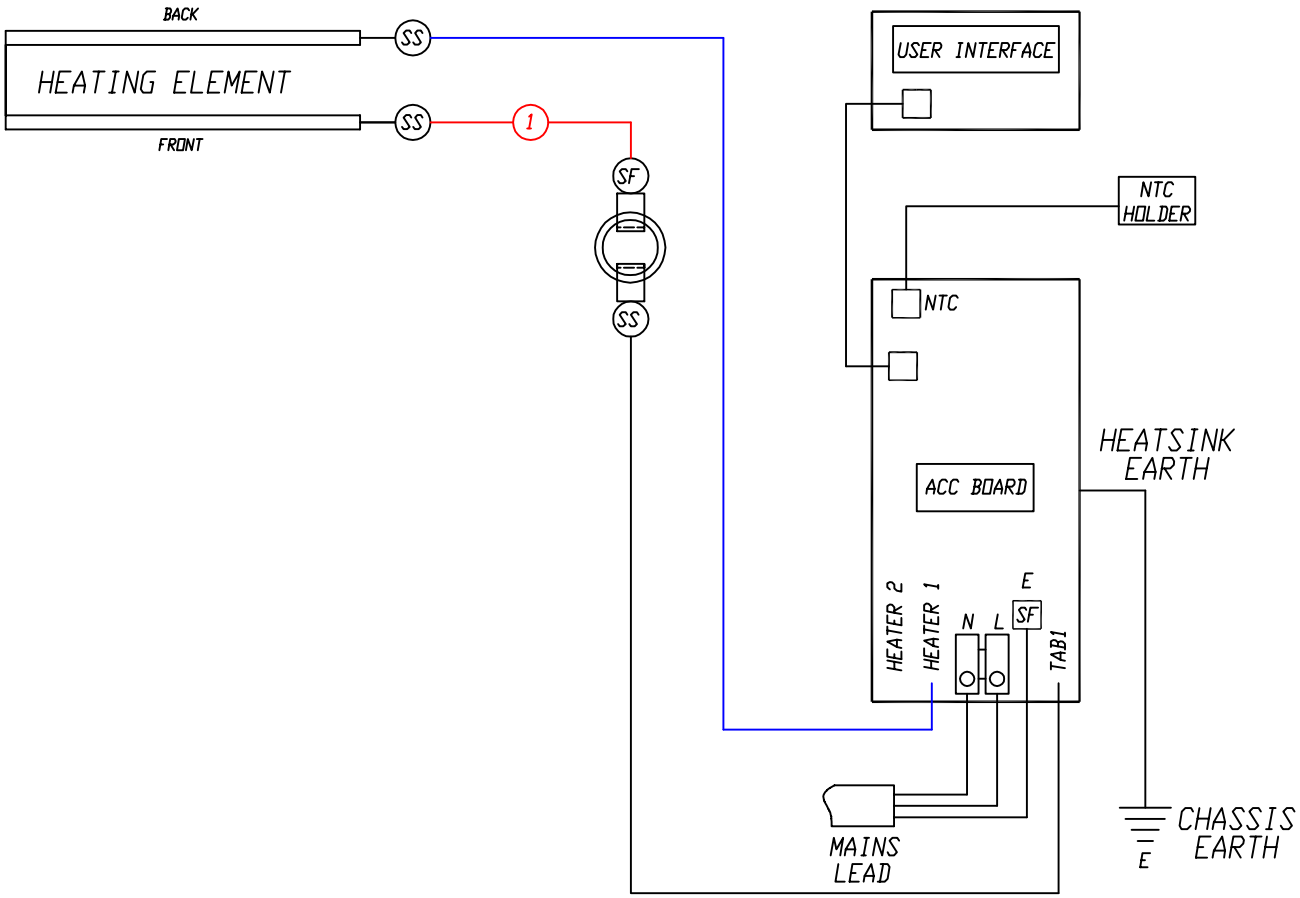

ISSUE	MODIFICATIONS	APPD	DATE
1	ISSUED FOR PRODUCTION	JB	14/11/17
2	WIRE LENGHTS UPDATED	JB	01/03/18
3	WIRE LENGHTS UPDATED	NT	17/06/19
4	WIRE LENGHTS & TERMINAL DETAIL UPDATED	NT	19/07/19
5	WIRE LENGHTS & TERMINAL DETAIL UPDATED	NT	09/08/19
6	SOLDERED WIRES ADDED	JB	25/10/19
7	PART NO. 02/62391/0 CHANGED TO 02/62627/0, WIRE LENGTH CHANGED TO 150MM.	JB	25/01/21

NOTES

ALL WIRE ASSY'S ARE TO BE SILICONE RUBBER INSULATED WIRE.

DO NOT SCALE

IF IN DOUBT ASK

THIRD ANGLE PROJECTION

GLEN DIMPLEX RESEARCH & DEVELOPMENT
Dunleer, Co. Louth, Ireland. Tel: 041 51309. Fax: 041 51464.

DRAWN BY	DATE	SCALE	HOLE TOL	GEN TOL
JB	13/07/16	-	+/-0.05	0 +/-0,4 0,0 +/-0,2 0,00+/-0,1
APP'D BY	DATE	DIM IN	ANGLES	
JH	14/11/17	mm	+/-0.5°	

MATERIAL

FINISH

THIS DRAWING IS SUPPLIED IN CONFIDENCE AND THE COPYRIGHT THEREOF IS THE PROPERTY OF GLEN DIMPLEX : IT MUST NOT BE USED BY A THIRD PARTY WITHOUT PRIOR PERMISSION. ©2016

PROJECT: PLX 2017

TITLE: 5-20 WIRING DIAGRAM

DRG NO: 00/11871/0

A3

Sht 1 of 1